TIP-ON BLUMOTION by Blum

BLUMOTION by Blum

LEGRABOX pure
LÉGRABOX pure

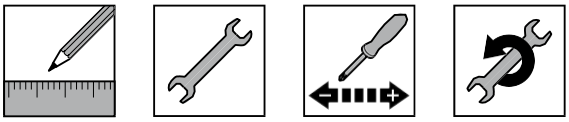

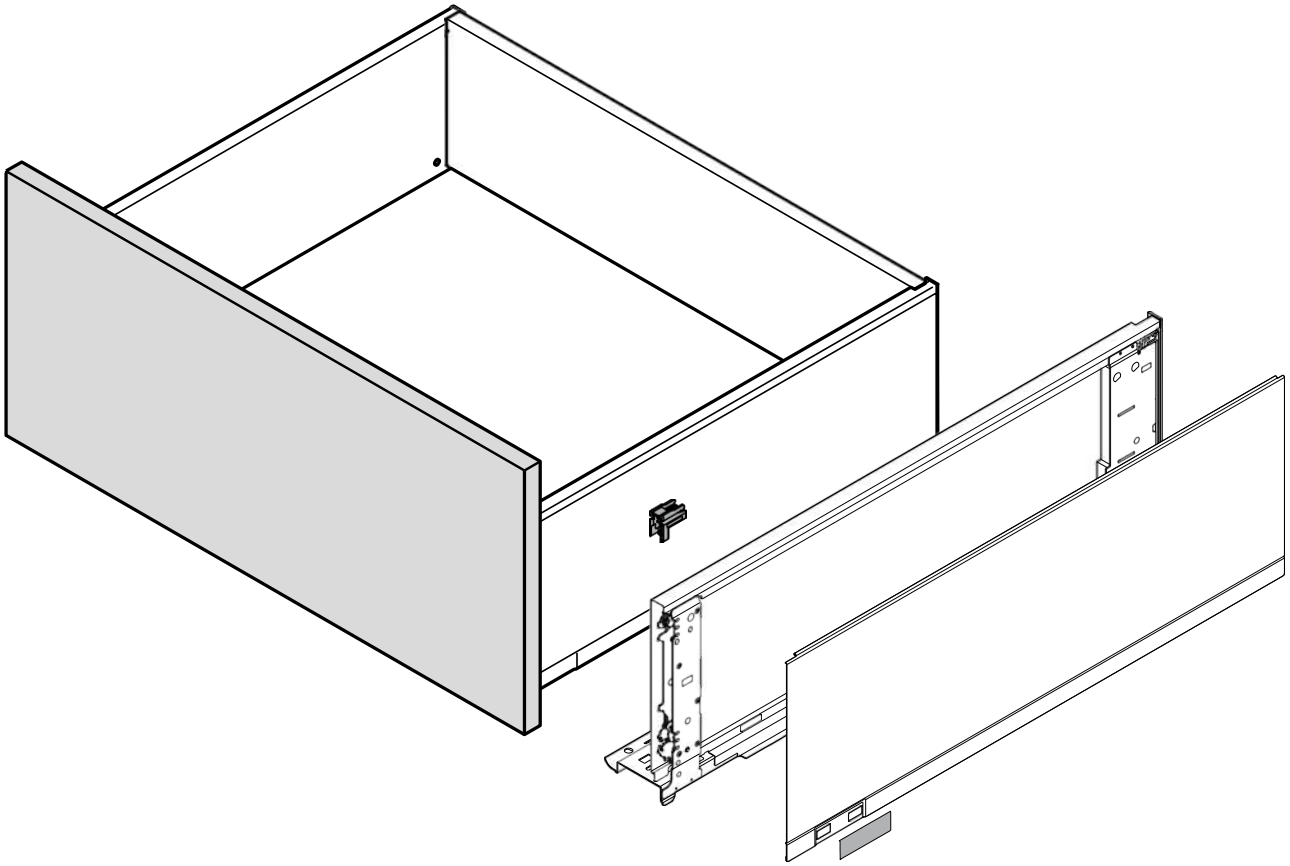

www.blum.com

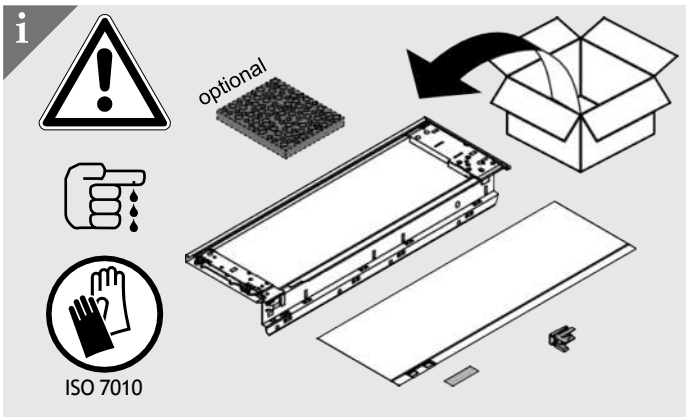
i
optional
ISO 7010

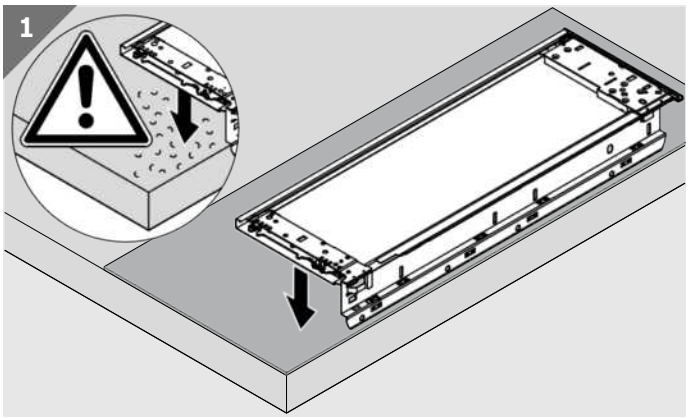
1

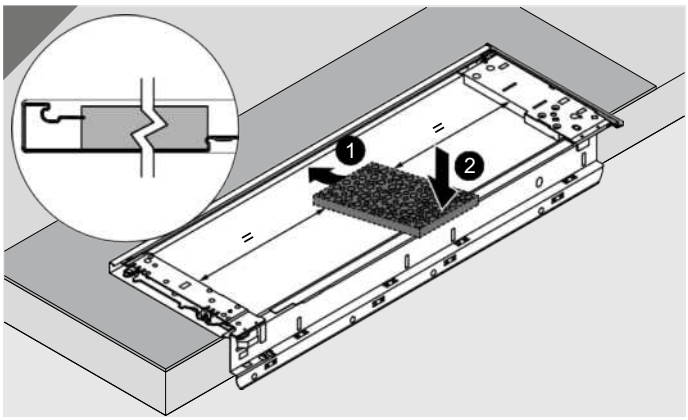
1
2

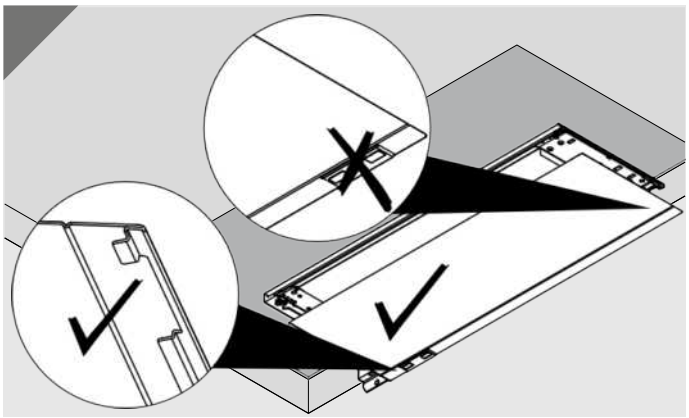

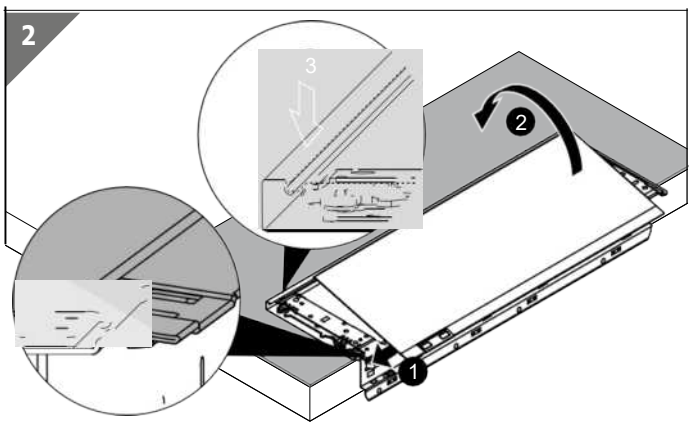
2
3
2
1

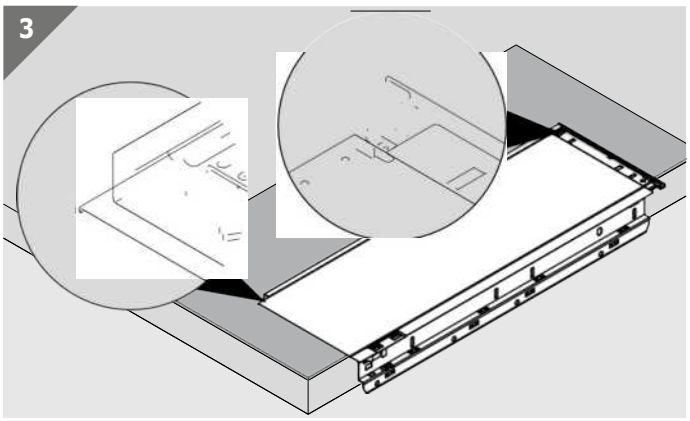
3

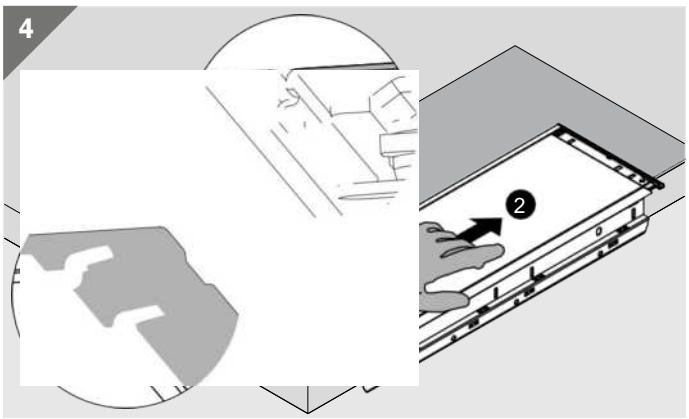
4
2

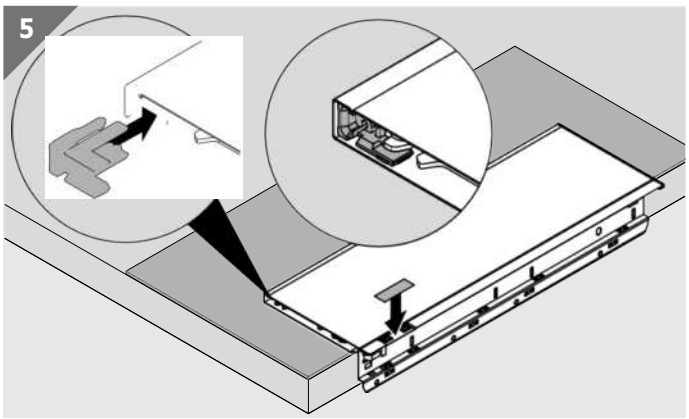
5

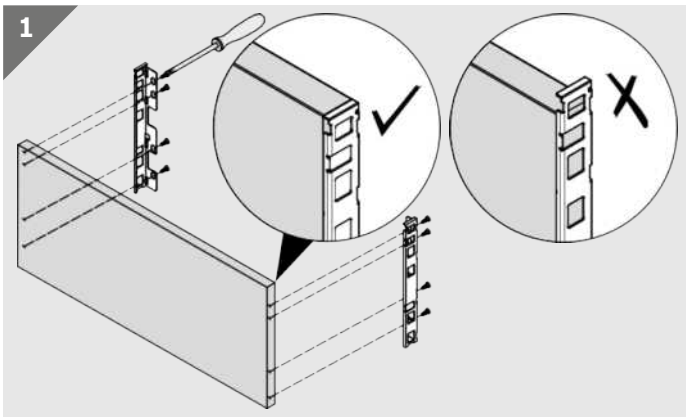
1

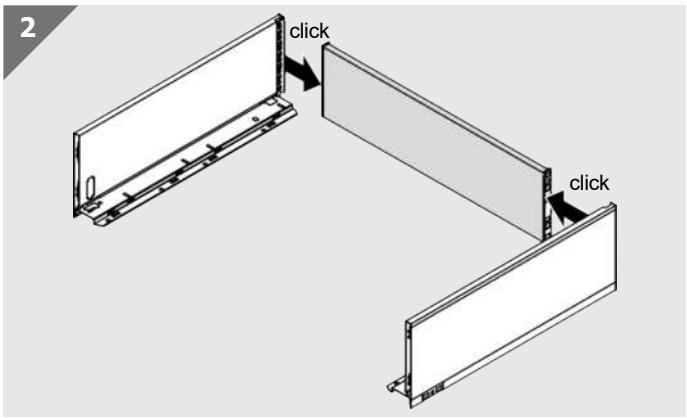
2
click
click

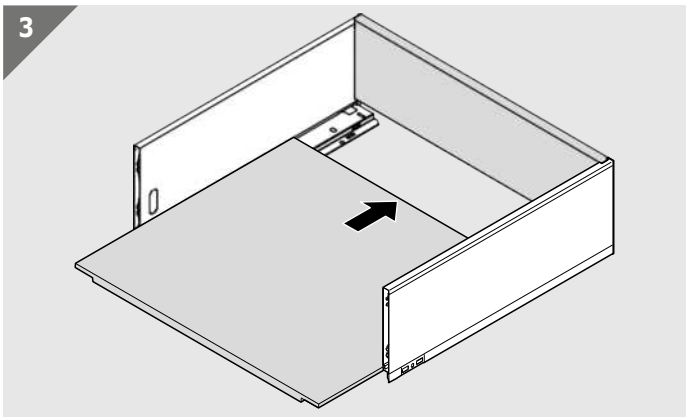
3

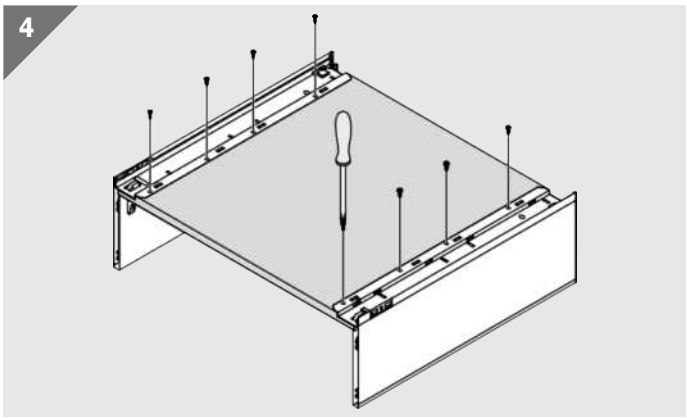
4

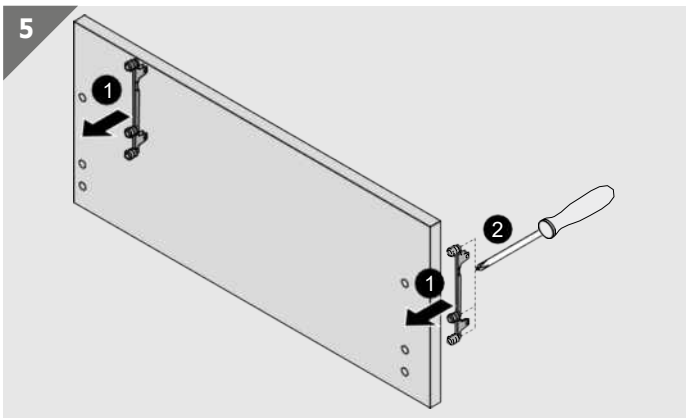
5
1
2
1

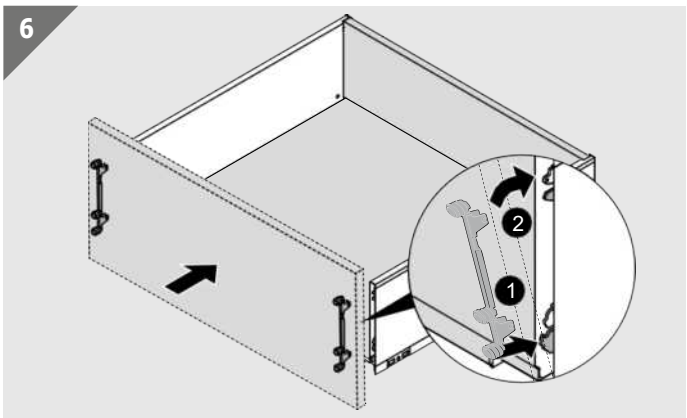
6
2
1

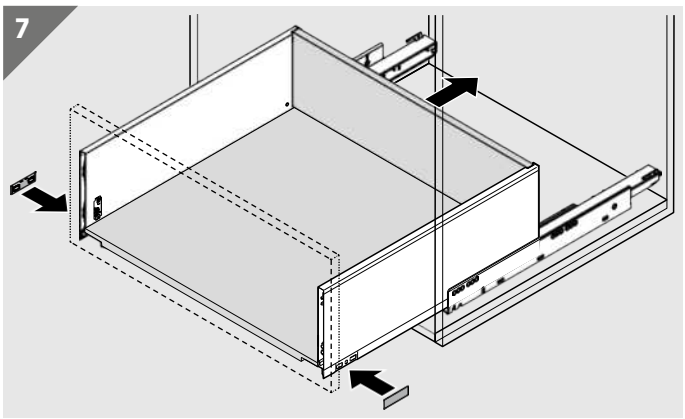
7

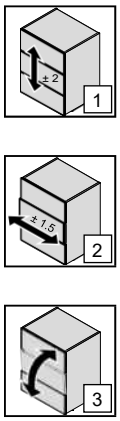

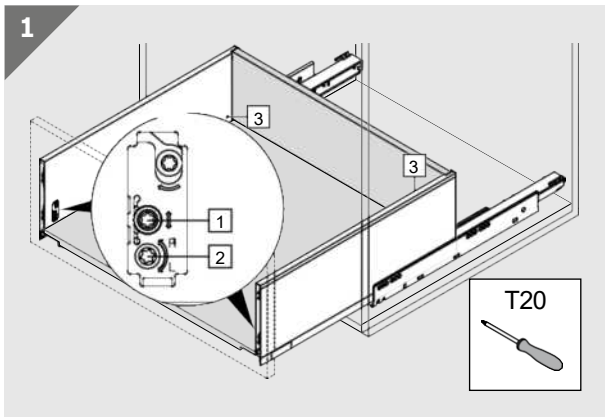

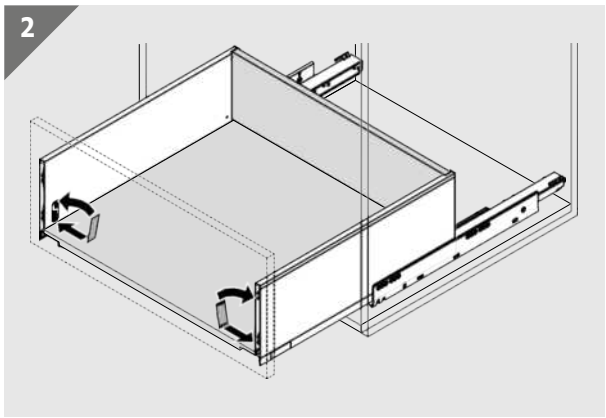

i KB ≥ 600 mm

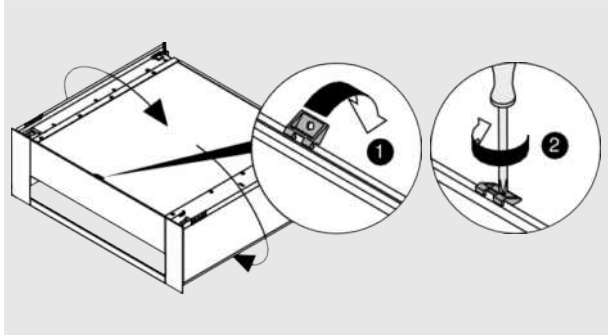

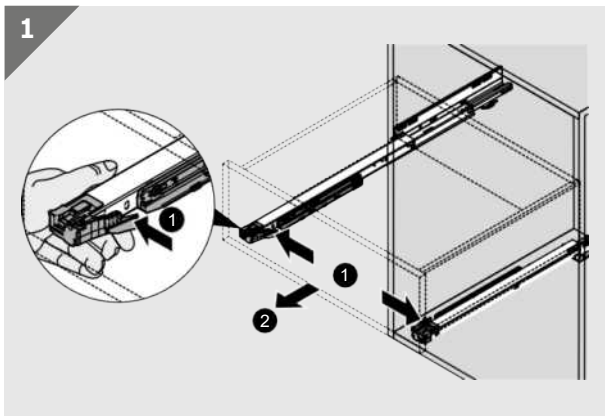

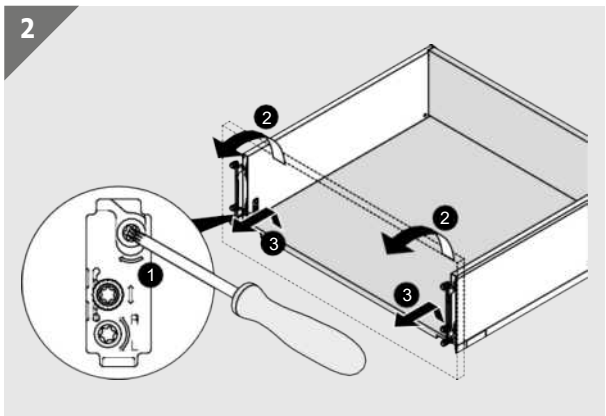

BAU0164069570 · IDX: 00· IDNR: 439.278.8 · MA-1053/0ML · 07.22 · © Copyright by Blum